UG6 Series
Uncooled IR Imaging Module

- Ultra-compact and lightweight, ideal for space constrained integration 17.3mm*17.3mm
- 12um Smallest VOX sensor and High Performance infrared chips
- Premium imaging and high reliability



FIRA VISION

IR IMAGING MODULE

SPECIFICATION	
Model	UG6 Series
Imaging & Optical	
Detector Type	VOx Uncooled Microbolometer
Resolution	640×512@12μm
Spectral Range	8 μm ~ 14 μm
Image Frequency	50Hz/60Hz
NETD	≤40mK@F1.0, 25°C
Lens Focal Length	4.1mm/4.6/mm/6.8mm/9.1mm/13mm/15mm/19mm
Thermal Time Constant	<12ms
NUC Correction	Manual/Auto Shutter Correction
Brightness/Contrast	Manual/Auto Adjustment
Image Denoising/DDE	Adjustable
Dead-pixel Correction	Support
Digital Zoom	1x-8x
Image Mirroring	Vertical/Horizontal/Diagonal
Analog Video Output	CVBS
Digital Video Output	USB-4pin/MIPI
Power Supply	6V~15V DC (CVBS/MIPI), 5V DC (USB2.0)
Palette	White Hot/Black Hot/Various Pseudo-color modes
Power Consumption	≤0.6W
Communication Interface	UART
Size(With lens)	17.3mm*17.3mm*23.5mm(Wthout lens)
Weight(With lens)	≤28g (Without lens)
Humidity	5%RH ~ 95%RH, non-condensing
Working Temperature	-40°C~+60°C
Storage Temperature	-50°C~+70°C
Vibration	6.06g, random vibration, all axes
Shock	80g@4ms, half-sine pulse, 3 axes & 6 directions
Extensible Features(Optional)	Crosshair, Hot spot tracking, External sync., RAW16bits Output

UG6 Series
Uncooled IR Imaging Module

1.7m×0.5m　　4.6m×2.3m

Lens	FOV	Detection	Recognition	Identification	Detection	Recognition	Identification
f4.1mm F1	86.25° x 73.69°	290m	96m	48m	785m	261m	130m
f4.6mm F1	79.71° x 67.47°	325m	108m	54m	881m	293m	146m
f9.1mm F1	45.76° x 37.31°	644m	214m	107m	1740m	581m	290m
f13mm F1	32.91° x 26.59°	920m	306m	153m	2490m	830m	415m
f15mm F1	28.72° x 23.15°	1006m	354m	177m	2880m	958m	479m
f19mm F1	22.85° x 18.37°	1350m	448m	224m	3640m	1210m	606m

Size:4.1mm/6.8mm

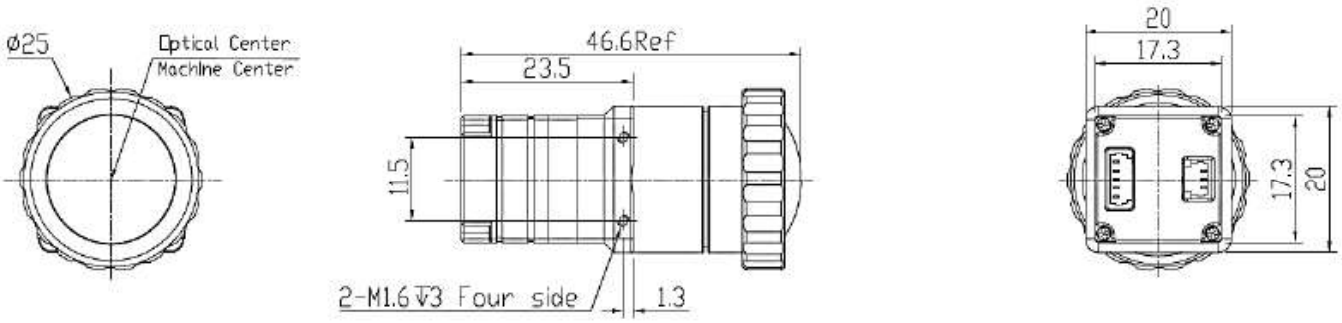

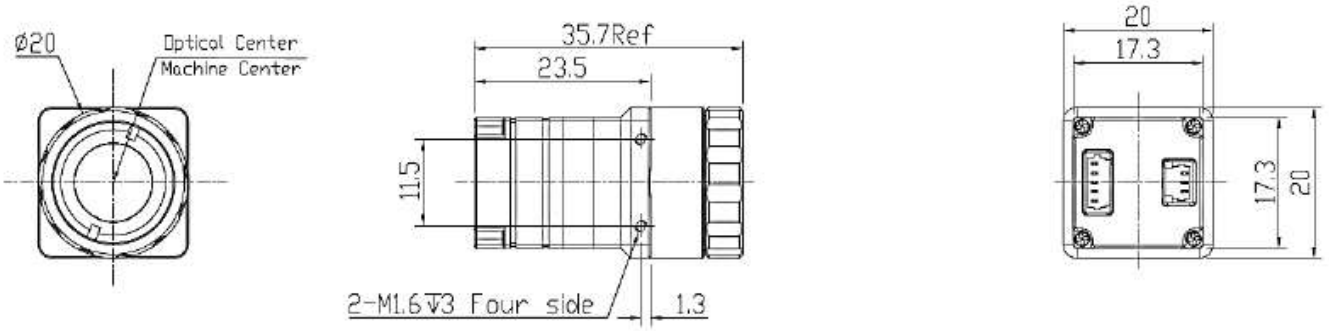

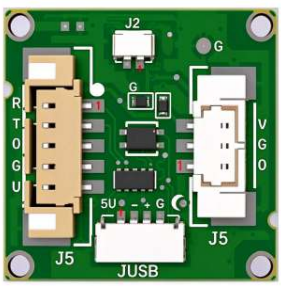

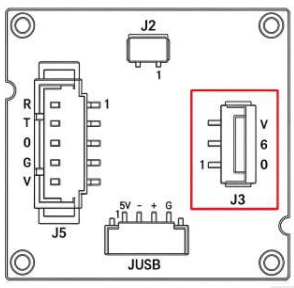

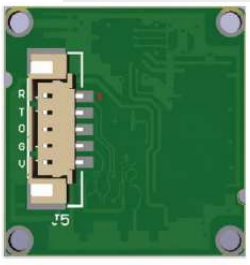

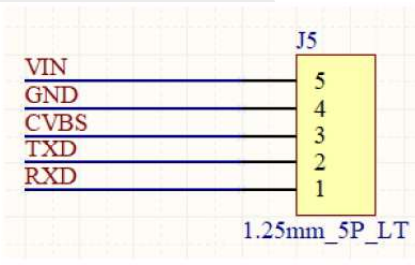

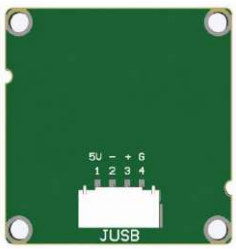

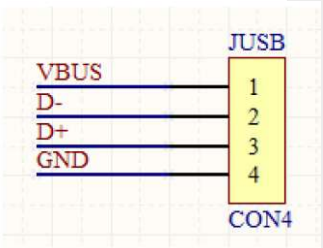

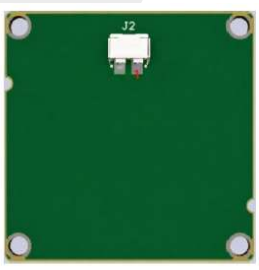

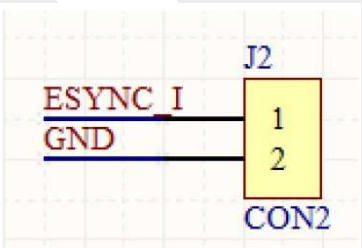

©08/10/2026 FIRA VISION all rights reserved. Design and specifications are subject to change without notice.

FIRA VISION
IR IMAGING MODULE