UX6 Series
Uncooled IR Imaging Module

- Ultra-compact and lightweight, ideal for space constrained integration 20mm*20mm
- LYNRED 12um Smallest VGA sensor and High Performance infrared chips
- Premium imaging and high reliability



SPECIFICATION	
Model	UX6 Series
Imaging & Optical	
Detector Type	VGA Uncooled Microbolometer
Resolution	640×480@12μm
Spectral Range	8 μm ~ 14 μm
Image Frequency	30Hz/60Hz
NETD	≤35mK@(30Hz, F/1, 300K)
Lens Focal Length	4.6/mm/6.8mm/9.1mm/13mm/15mm/19mm/25mm/35mm
Thermal Time Constant	<10ms
NUC Correction	Munual/Auto/Shutter correction
Brightness/Contrast	Manual/Auto Adjustment
Image Denoising/DDE	Adjustable
Dead-pixel Correction	Support
Digital Zoom	1x-8x
Image Mirroring	Vertical/Horizontal/Diagonal
Analog Video Output	CVBS
Digital Video Output	USB2.0/MIPI
Power Supply	6V~15V DC (CVBS/MIPI), 5V DC (USB2.0)
Palette	White Hot/Black Hot/Various Pseudo-color modes
Power Consumption	≤0.8W
Communication Interface	UART (RS232/RS422/RS485 Customizable)
Size(With lens)	20mm*20mm*20.8mm(Wthout lens)
Weight(With lens)	≤25g (Without lens)
Humidity	5%RH ~ 95%RH, non-condensing
Working Temperature	-40℃~+60℃
Storage Temperature	-50℃~+70℃
Vibration	MIL-STD883H, method 2007.3, condition A
Shock	MIL-STD810G, method 516.6: Ground Equipment; MIL-STD883.G, method 2002.5, condition A
Extensible Features(Optional)	Crosshair, Hot spot tracking, External sync., RAW16bits Output

FIRA VISION

IR IMAGING MODULE

UX6 Series
Uncooled IR Imaging Module

1.7m×0.5m

4.6m×2.3m

Lens	FOV	Detection	Recognition	Identification	Detection	Recognition	Identification
f4.6mm F1	79.71° x 64.10°	325m	108m	54m	881m	293m	146m
f9.1mm F1	45.76° x 35.12°	644m	214m	107m	1740m	581m	290m
f13mm F1	32.91° x 24.98°	920m	306m	153m	2490m	830m	415m
f15mm F1	28.72° x 21.74°	1006m	354m	177m	2880m	958m	479m
f19mm F1	22.85° x 17.24°	1350m	448m	224m	3640m	1210m	606m
f25mm F1	17.46° x 13.14°	1770m	590m	295m	4790m	1600m	798m
f35mm F1	12.52° x 9.41°	2480m	826m	413m	6710m	2240m	1120m

Size:9.1mm/13mm/15mm/19mm lens

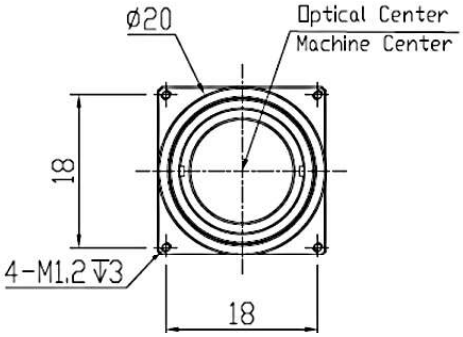

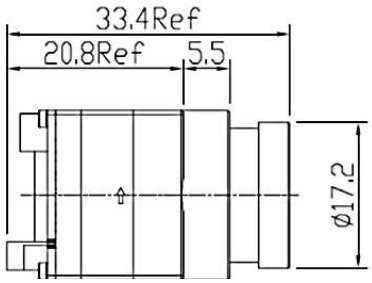

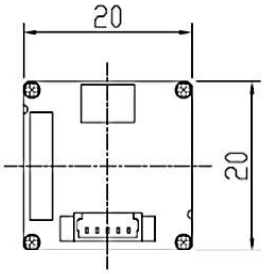

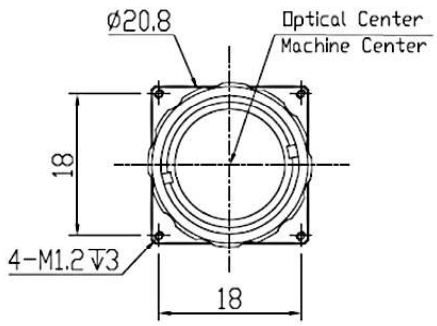

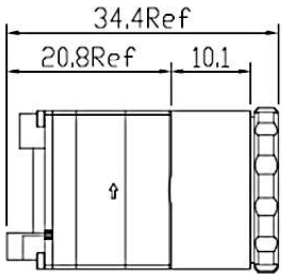

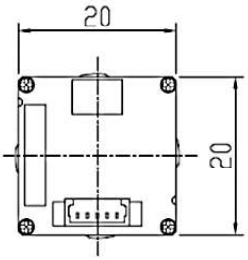

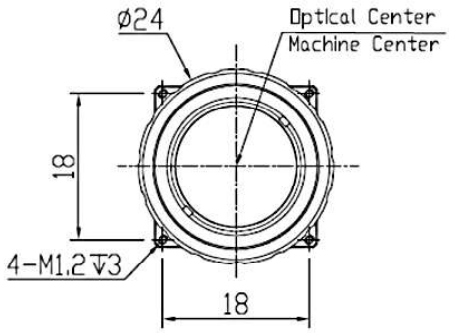

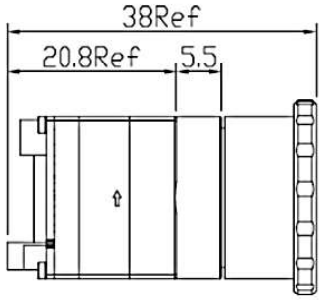

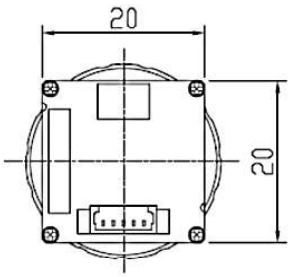

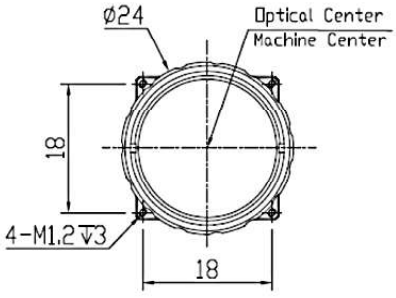

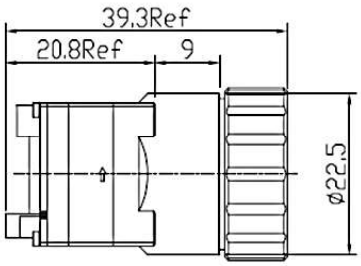

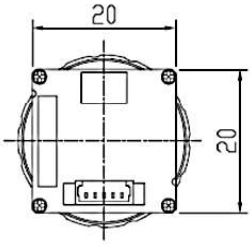

©08/10/2026 FIRA VISION all rights reserved. Design and specifications are subject to change without notice.

FIRA VISION

IR IMAGING MODULE