# US6 Series
# Uncooled IR Imaging Module

- Optimized for long focal length lenses up to 300mm lens
- Integrated lens driver with extended functions
- Multiple digital video output interfaces



| SPECIFICATION | |
|---|---|
| Model | US6 Series |
| **Imaging & Optical** | |
| Detector Type | Vox Uncooled Microbolometer |
| Resolution | 640×512@12μm |
| Spectral Range | 8 μm ~ 14 μm |
| Image Frequency | 50Hz |
| NETD | ≤40mK@F1.0 25℃ |
| Lens Focal Length | 4.6mm/9.1mm/13mm/19mm/25mm/35mm/50mm/75mm/100mm/150mm/200mm/300mm |
| Thermal Time Constant | <12ms |
| NUC Correction | Manual/Auto Shutter Correction |
| Digital Zoom | 1x-8x continuous zoom(step size: 1) |
| Image Mirroring | Vertical/Horizontal/Diagonal |
| Digital Video | SDI, Camera Link, LVDS, BT601, BT656, BT1120, USB |
| Power Supply | 5V~28V DC |
| Palette | White Hot/Black Hot/Various palettes supported |
| Power Consumption | <1.2 W |
| Communication Interface | Default: RS232; Optional: RS422, RS485, TTL |
| Size | 28mm×28mm×30.5mm（W×H×L) (without lens) |
| Weight | ≤35g (Without lens) |
| Humidity | 5%RH ~ 95%RH, non-condensing |
| Working Temperature | -40℃~+60℃ |
| Storage Temperature | -50℃~+70℃ |
| Vibration | 6.06g, random vibration, all axes |
| Shock | 80g, 4ms, final peak sawtooth wave, three axes and six directions |
| Extensible Features(Optional) | PIP, Crosshairs, Hot tracking, Zoom lens control, Auto-focus, etc. |

FIRA VISION

IR IMAGING MODULE

# US6 Series
# Uncooled IR Imaging Module

1.7m×0.5m

4.6m×2.3m

| Lens | FOV | Detection | Recognition | Identification | Detection | Recognition | Identification |
|---|---|---|---|---|---|---|---|
| f4.6mm F1 | 79.71° x 67.47° | 325m | 108m | 54m | 881m | 293m | 146m |
| f9.1mm F1 | 45.76° x 37.31° | 644m | 214m | 107m | 1740m | 581m | 290m |
| f13mm F1 | 32.91° x 26.59° | 920m | 306m | 153m | 2490m | 830m | 415m |
| f19mm F1 | 22.85° x 18.37° | 1350m | 448m | 224m | 3640m | 1210m | 606m |
| f25mm F1 | 17.46° x 14.01° | 1770m | 590m | 295m | 4790m | 1600m | 798m |
| f35mm F1 | 12.52° x 10.03° | 2480m | 826m | 413m | 6710m | 2240m | 1120m |
| f50mm F1 | 8.78° x 7.03° | 3540m | 1180m | 590m | 9580m | 3190m | 1600m |
| f75mm F1 | 5.86° x 4.69° | 5310m | 1770m | 885m | 14370m | 4790m | 2400m |
| f100mm F1 | 4.40° x 3.52° | 7008m | 2360m | 1180m | 19170m | 6390m | 3190m |
| f150mm F1 | 2.93° x 2.35° | 10630m | 3540m | 1770m | 28750m | 9580m | 4790m |
| f200mm F1 | 2.20° x 1.76° | 14170m | 4720m | 2360m | 38330m | 12780m | 6390m |
| f300mm F1 | 1.47° x 1.17° | 21250m | 7080m | 3540m | 57500m | 19170m | 9580m |

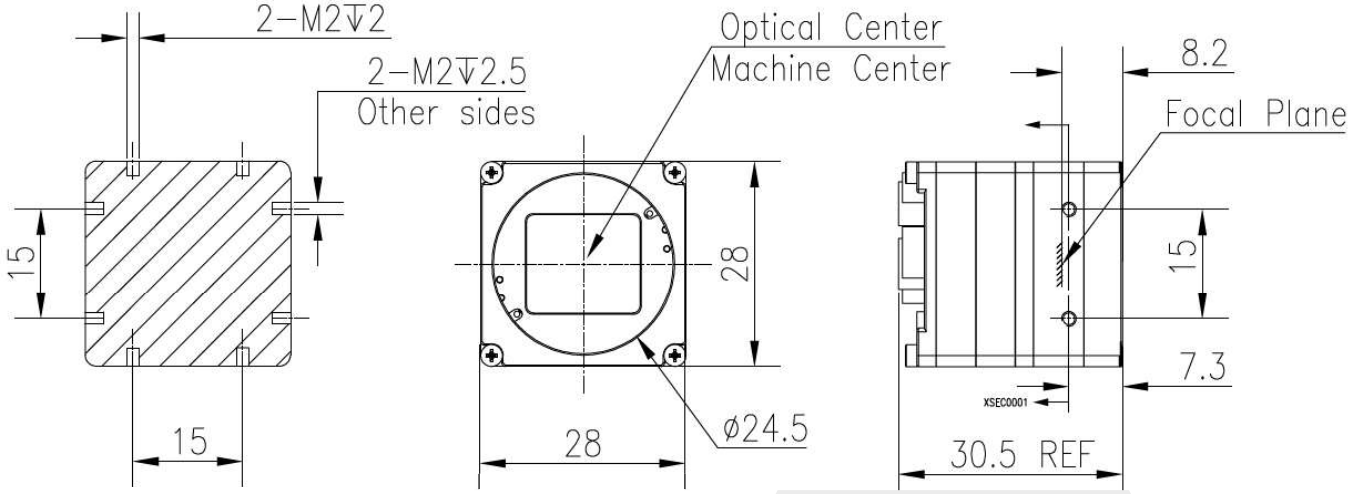


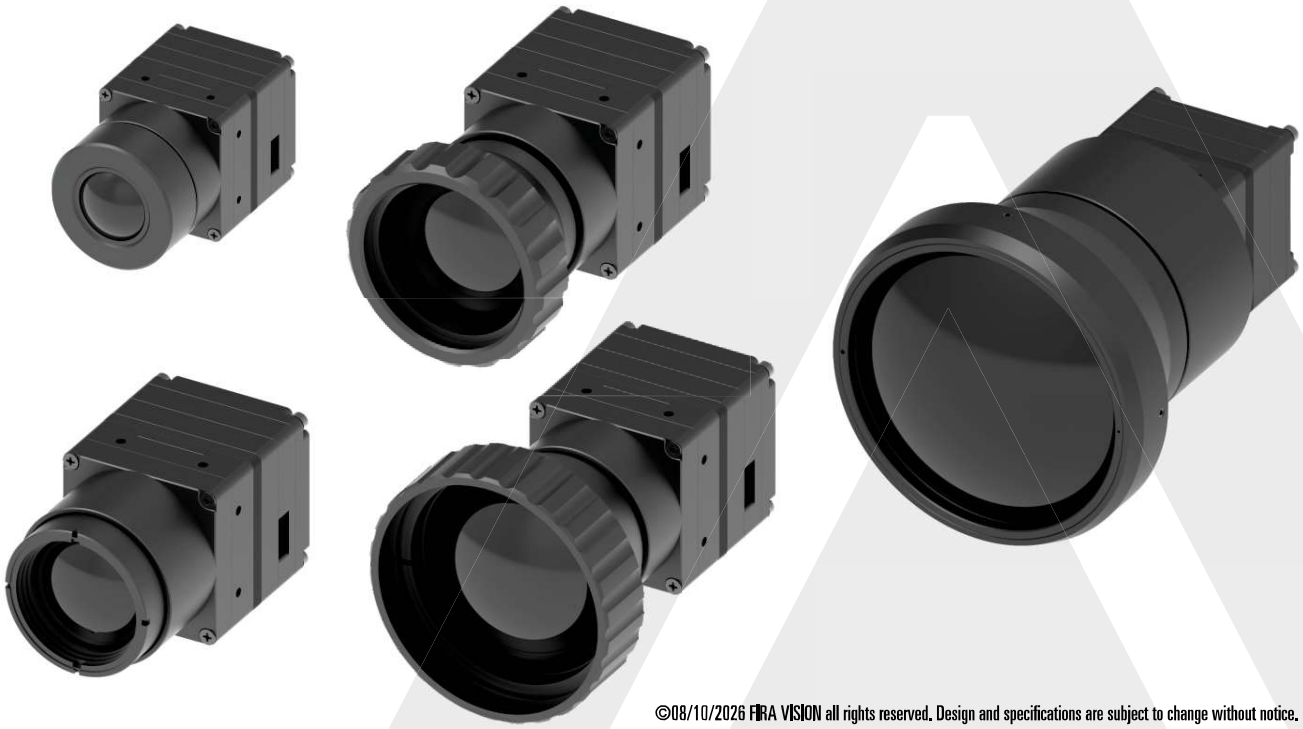

©08/10/2026 FIRA VISION all rights reserved. Design and specifications are subject to change without notice.

IR IMAGING MODULE