UL12 Series
Uncooled IR Imaging Module

- Onboard image enhancement ensures crisp and vibrant thermal images
- High Frame Rate 12um Vox infrared Detector and High Performance infrared ISP chips
- Lightweight design, low power consumption and cost effectiveness



FIRA VISION

IR IMAGING MODULE

SPECIFICATION	
Model	UL12 Series
Imaging & Optical	
Detector Type	Vox Uncooled Microbolometer
Resolution	1280×1024@12μm
Spectral Range	8 μm ~ 14 μm
Image Frequency	30Hz/50Hz
NETD	≤40mK@F1.0 25℃
Lens Focal Length	8.7mm/35mm/55mm/75mm/100mm/150mm/225mm/300mm
Thermal Time Constant	<12ms
Image Adjustment	Brightness/Contrast, DDE, DeNoise etc.
NUC Correction	Manual/Auto Shutter Correction
Digital Zoom	1x-8x continuous zoom
HD Analog Video	AHD
Image Mirroring	Vertical/Horizontal/Diagonal
Digital Video	HDMI/MIPI/BT1120/LVDS/SDI/Cameralink/USB3.0
Power Supply	DC 9V~24V(AHD/SDI), DC5V(USB3.0), DC5~12V(Cameralink/MIPI)
Palette	White Hot/Black Hot/Various palettes supported
Power Consumption	≤1.6W(@30Hz)
Communication Interface	RS422 (RS232, TTL optional)
Size(WxHxL-Without lens)	43mm*43mm*25mm(With Cameralink output) 29×29×26mm(Optional)
Weight	≤80g (Without lens)
Humidity	5%RH ~ 95%RH, non-condensing
Working Temperature	-40℃~+60℃
Storage Temperature	-50℃~+70℃
Vibration	6.06g, random vibration, all axes
Shock	80g, 4ms, final peak sawtooth wave, three axes and six directions
Extensible Features(Optional)	PIP, Crosshairs, Hot tracking, Zoom lens control, Auto-focus, etc.

UL12 Series
Uncooled IR Imaging Module

1.7m×0.5m

4.6m×2.3m

Lens	FOV	Detection	Recognition	Identification	Detection	Recognition	Identification
f8.7mm F1	82.87° x 70.46°	616m	205m	102m	1670m	555m	277m
f35mm F1	24.75° x 19.91°	2480m	826m	413m	6710m	2240m	1120m
f55mm F1	17.46° x 14.01°	3900m	1300m	649m	1054m	3510m	1760m
f75mm F1	11.69° x 9.37°	5310m	1770m	885m	14370m	4790m	2400m
f100mm F1	8.78° x 7.03°	7008m	2360m	1180m	19170m	6390m	3190m
f150mm F1	5.86° x 4.69°	10630m	3540m	1770m	28750m	9580m	4790m
f225mm F1	3.91° x 3.31°	15940m	5310m	2660m	43130m	14380m	7190m
f300mm F1	2.93° x 2.35°	21250m	7080m	3540m	57500m	19170m	9580m

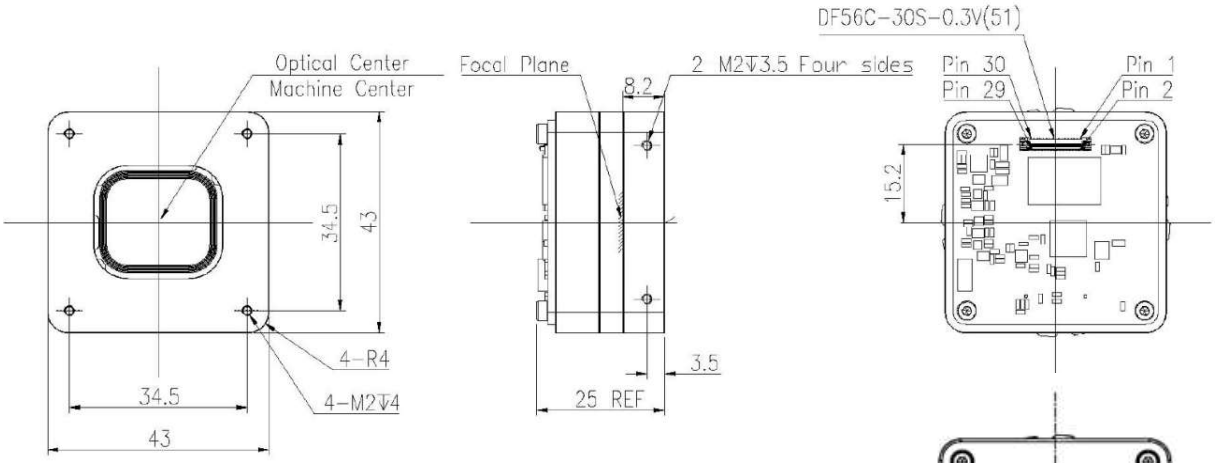

MIPI Interface:

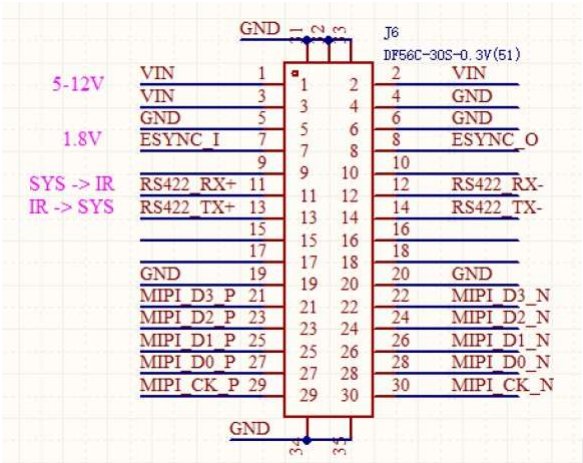

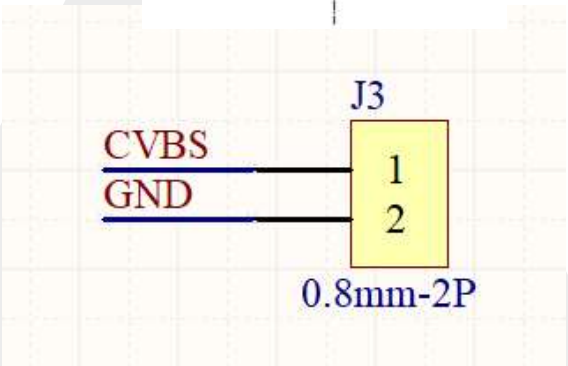







IR IMAGING MODULE

©08/10/2026 FIRA VISION all rights reserved. Design and specifications are subject to change without notice.